SCHEDULE OF QUANTITIES

SUMMARY OF QUANTITIES

Item Number	Items	Unit	Quantity
1	Topsoil, Furnish and Place, 4	Sq Yd	1500
2	Seeding, Class 1A	Ac	0.3
3	Mulch, Method 2	Ac	0.3
4	Storm Sewers, Class B, 12, 12	Foot	379
5	Storm Sewers, Class B, 12, 18	Foot	97
6	Storm Sewers, Class B, 12, 20	Foot	258
7	Sanitary Sewer, PVC, SDR-26, 8	Foot	1165
8	Sanitary Sewer, PVC, SDR-26, 16	Foot	648
9	Ty B Inlets, T3 Fr. & Gr.	Each	8
10	Catch Basins TA, 4 Dia., T8 Fr. & Gr.	Each	7
11	Catch Basins TA, 4 Dia., T1 Fr., CL.	Each	5
12	Sanitary Sewer, PVC, 6	Foot	240
13	Sewer Service Connection, 8	Each	35
14	Sewer Service Connection, 15	Each	13
15	Connection to Existing Manhole	Each	2
16	Pavement Removal & Replacement	Sq Yd	1943
17	Driveway Pavement, Rem. & Rplc.	Sq Yd	58
18	CC&G TB Spd AEP	Foot	152
19	CC&G Rem & Rplc B-6.18	Foot	646
20	Adjust Watermain	Each	4
21	Traffic Control Complete	L Sum	1
22	Trench Backfill	Cu Yd	1657
23	PCC Sidewalk 4, Rem. & Rplc.	Sq Ft	20
24	Water Services Reconnect	Each	10
2	MH TA 4 Dia T1F CL	Each	7

CONDITIONAL BID ITEMS

Item Number	Items	Unit	Quantity
1	HMA Surf Rem 2"	Sq Yd	2433
2	HMA SC Mix "C" N50	Ton	219
3	Area Reflective Cr. Ctrl Treatment	Sq Yd	4376

TRENCH BACKFILL

Number	Location	Avg. Depth	Length	Volume (C.Y.)
1	10+00 - 12+33	7.9	233	281
2	12+33 - 13+99	8.4	166	215
3	13+99 - 15+30	10.3	131	212
4	50+00 - 52+24	6.7	224	206
5	52+24 - 55+98	6.1	374	310
6	70+00 - 72+23	8.4	223	260
7	72+23 - 74+40	4.8	217	139
8	74+40 - 75+67	2.4	127	22
9	20+02 - 20+33	2.2	31	5
10	15+15, 23 L - 15+27, 12 L	2.6	17	3
11	15+27, 2 L - 15+27, 12 L	2.8	10	2
12	13+91, 11 R - 13+94, 13 L	1.3	24	3
				1657

Water Reconnect

Number	Station
Walnut Street	
1	11+85, Lt.
2	13+06, Lt.
3	13+86, Lt.
N. Joliet Street	
4	50+68, Rt.
5	51+66, Rt.
6	54+41, Rt.
7	55+51, Rt.
Sobieski Street	
8	74+32, Lt.
9	74+53, Lt.
10	22+31 Rt.
	10 Each

Sewer Service Reconnect

Walnut Street	15"x6"	13
N. Joliet Street	8"x6"	15
Sobieski Street	8"x6"	20
		48 Each

Note: Sanitary Sewer Service locations are not known. The contractor will work with the Engineer to dye test or smoke test lines to assure no residence is left unconnected.

CC&G B-6.18

Location	Length
13+94 - 15+16, L	132
70+00, T.L.	20
	152

Adjust Watermain

Number	Station
1	13+83, Lt.
2	21+73, T.L.
3	52+12, 8' Rt.
4	72+17, 16' Lt.
	Total-4 Each

TY B INLET

Number	Station
1	13+93.6, 11.2 Lt.
2	13+91.8, 8.8 Lt.
3	15+15.7, 23.0 Lt.
4	15+27.3, 2' Lt.
5	20+07.6, 8.9 Lt.
6	20+31.2, 9.3 Lt.
7	23+04, 6.6 Lt.
8	23+28.2, 6.6 Lt.
	Total-8 Each

Ty B Curb

Location	Length
10+00 - 12+17, L	234
12+42 - 13+94, L	172
52+12, L & R	20
72+19, L & R	20
Miscellaneous	200
	646

TA MH 4 w/T1 Fr&CL(Sim.)

Number	Station
1	10+00, 12.8 L.
2	12+33, 12.1 L.
3	13+86, 14 L.
4	15+30.2, 9.2 L.
5	52+23.8, T.L.
6	55+97.5, T.L.
7	72+23, T.L.
	Total-7 Each

Connection to Existing MH

Number	Station
1	75+67, T.L.
2	16+53.2, 10.1, L
	Total-2 Each

Catch Basins TA w/TY 1 FR & C.L.(Storm)

Number	Station
1	60+00, T.L.
2	13+95.6, 14.0 Lt.
3	15+27.3, 12.2 Lt.
4	20+34.4, T.L.
5	22+96.8, T.L.
	Total-5 Each

TY A MH w/R-4340-B GR.

Number	Station
1	21+67.1, T.L.
2	61+10.5, T.L.
	Total-2 Each

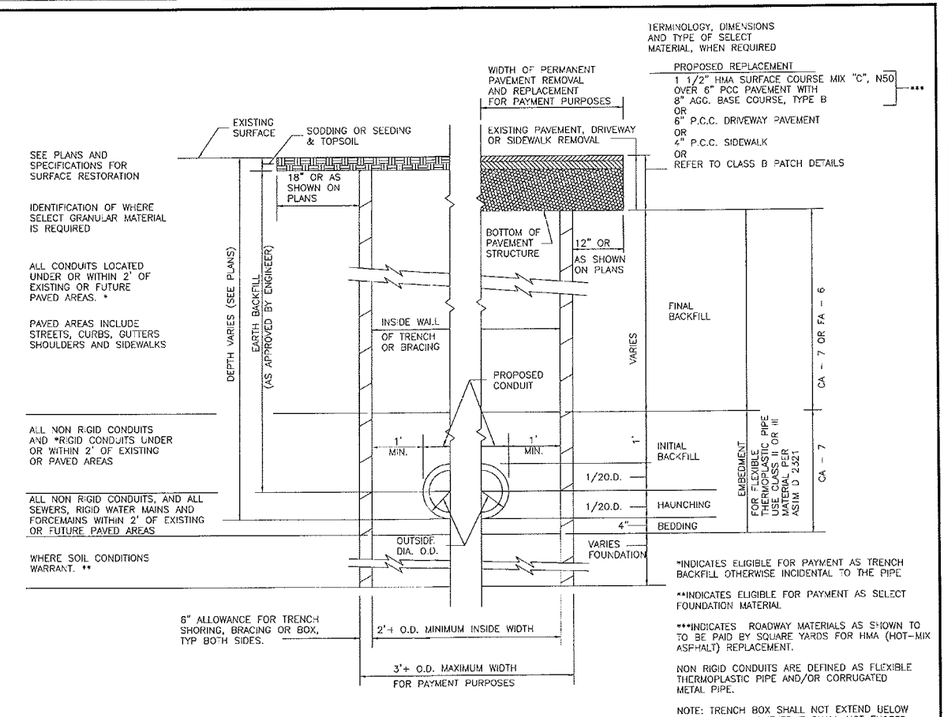

*INDICATES ELIGIBLE FOR PAYMENT AS TRENCH BACKFILL OTHERWISE INCIDENTAL TO THE PIPE

**INDICATES ELIGIBLE FOR PAYMENT AS SELECT FOUNDATION MATERIAL

***INDICATES ROADWAY MATERIALS AS SHOWN TO TO BE PAID BY SQUARE YARDS FOR HMA (HOT-MIX ASPHALT) REPLACEMENT.

NON RIGID CONDUITS ARE DEFINED AS FLEXIBLE THERMOPLASTIC PIPE AND/OR CORRUGATED METAL PIPE.

NOTE: TRENCH BOX SHALL NOT EXTEND BELOW TOP OF PIPE, HOWEVER IT SHALL NOT EXCEED 2 FEET FROM THE BOTTOM OF THE TRENCH.

TYPICAL TRENCH DETAIL

NOT TO SCALE

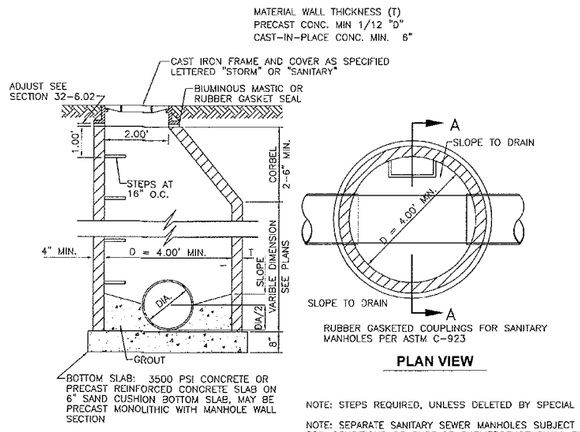

SECTION A-A

PLAN VIEW

NOTE: STEPS REQUIRED, UNLESS DELETED BY SPECIAL PROVISIONS

NOTE: SEPARATE SANITARY SEWER MANHOLES SUBJECT TO SATURATED SOIL CONDITIONS OR SURFACE SUBMERGENCE SHALL BE EQUIPPED WITH CHIMNEY SEALS AND WATER TIGHT MANHOLE COVERS.

MANHOLE TYPE A

NOT TO SCALE

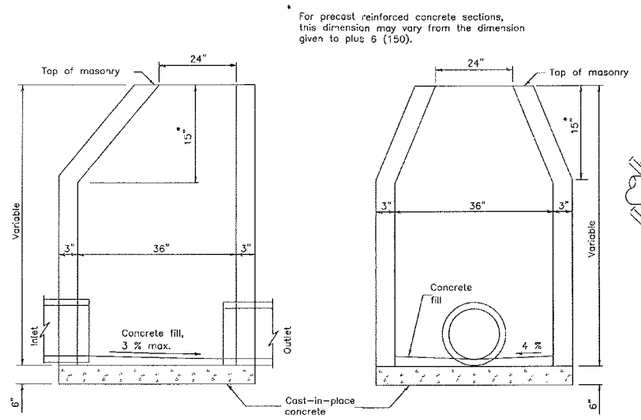

ELEVATION - ECCENTRIC

ELEVATION - ECCENTRIC

INLET, TYPE B

NOT TO SCALE

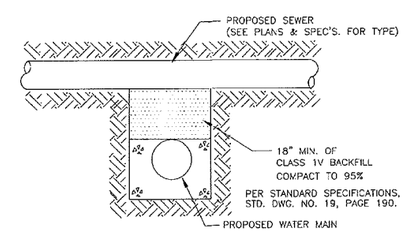

WATER AND SEWER SEPARATION DETAIL

NOT TO SCALE

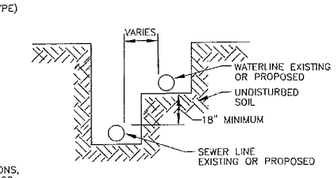

WATER AND SEWER SEPARATION REQUIREMENTS

NOT TO SCALE

DRAWN BY: NOE	REVISIONS				CURRENT AS OF: 03/28/10
CHECKED BY: MJF	LEVEL	BY	DATE	DESCRIPTION	SCALE: AS NOTED — SHEET 2
DATE: 01/10					FILE NO.: 6985.01 Y- — OF 8

CHAMLIN & ASSOCIATES — PERU MORRIS ILLINOIS

CITY OF LASALLE
NORTH JOLIET STREET
SEWER REHABILITATION

DETAILS AND SUMMARY OF QUANTITIES

CHAMLIN & ASSOCIATES, INC. ©2009
Drawing Name: C:\Land Projects 2009\N_Joliet Sen replacement 2010\REV-3-21-11\6985-00-LaSalle-Street-Topo\CAD\C3\002-DETAILS.dwg Last Modified: Apr 15, 2011 - 11:11am Plotted on: Apr 15, 2011 - 11:12am by Aset Engr